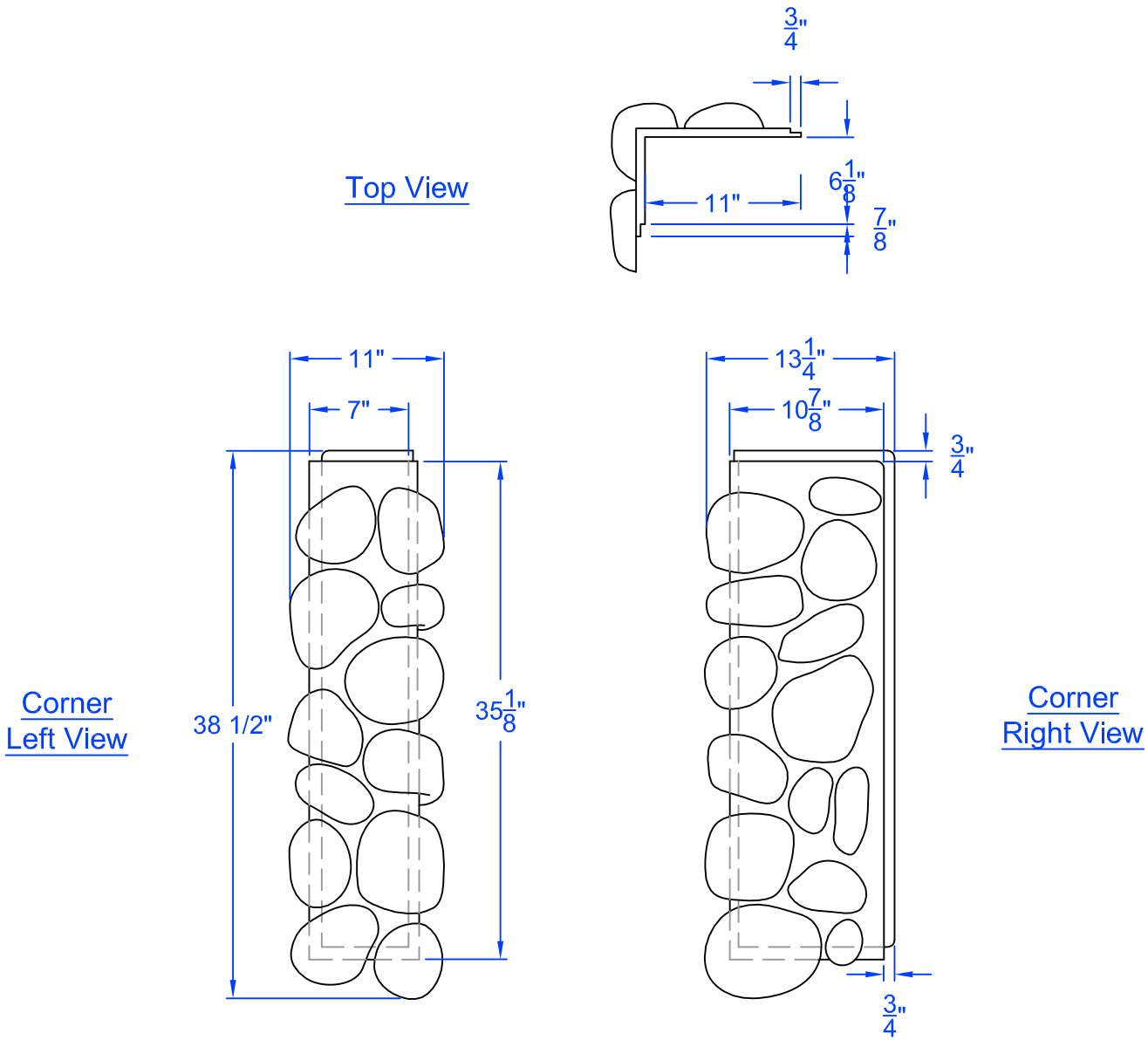

Sheet No.		Model No.	AnticoElements.com	Brook Stone
		OC5-SA OC5-BR OC5-GR	All Rights Reserved	River Rock Corner