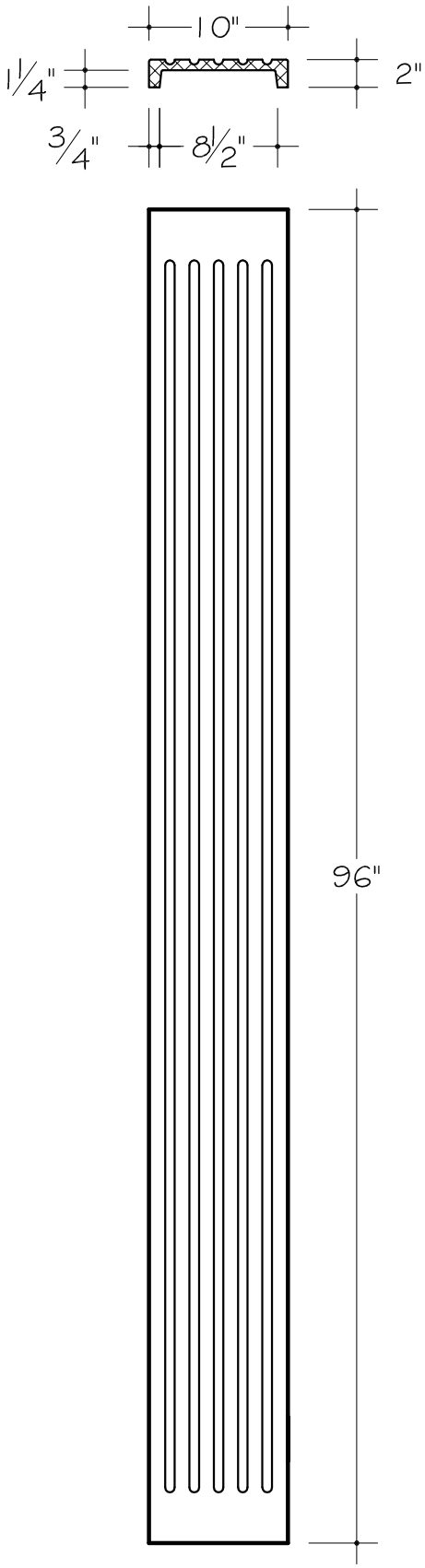

AP-527

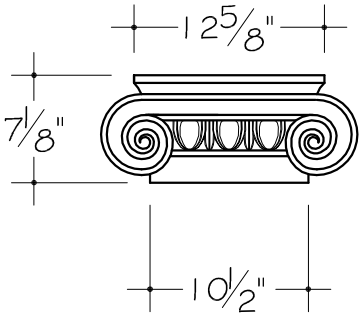

Front View

AP-528

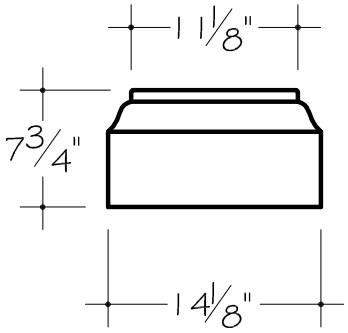

Front View

AP-522

ALL ITEMS ON THIS PAGE DRAWN AT 1" = 1'-0"

Travertine Marble

AnticoElements.com

Model No.
AP - 527
AP - 528
AP - 522

Sheet No.